3.2 DINAMIKA

Kaskadnih pojačala

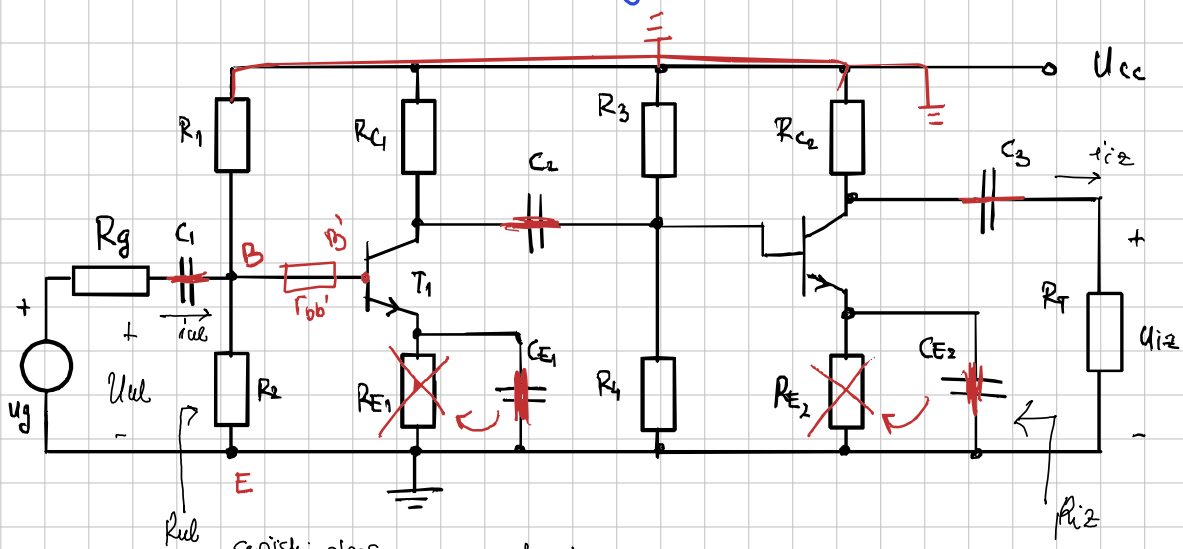

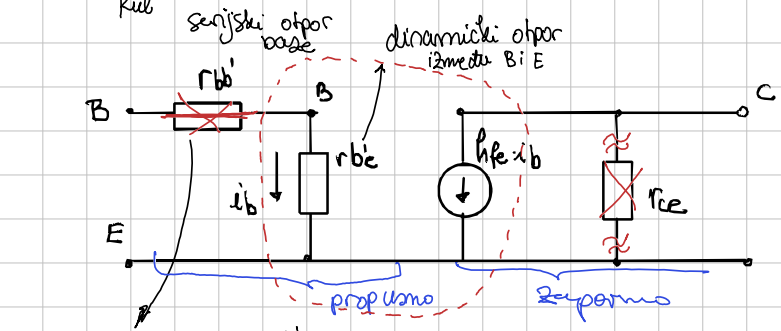

pretpostavljamo da je zanemariv $\rightarrow r_{bb'} \rightarrow 0$

$r_{bb'} << r_{b'e} \rightarrow r_{be} = r_{b'e}$

$r_{ce} \rightarrow \infty$; zanemariv

$r_{ce} >> R_C, R_E, R_1 \dots R_4$

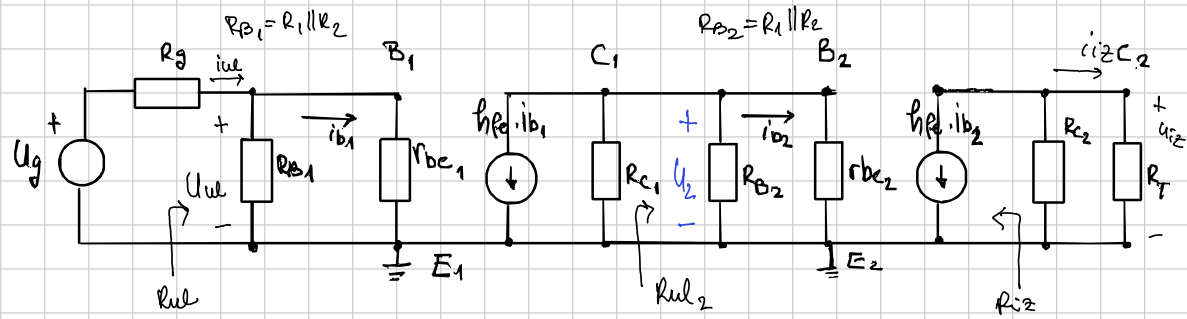

- granica između dva stupnja je C_2 (izlaz U_2)

$$A_{V_2} = \frac{U_{iz}}{U_2} \quad ; \quad A_{V_1} = \frac{U_2}{U_{ul}} \quad \Longrightarrow \quad A_V = \frac{U_{iz}}{U_{ul}} = A_{V_2} \cdot A_{V_1}$$

$$A_{I_1} = \frac{i_{iz}}{i_2} \quad ; \quad A_{I_1} = \frac{i_2}{i_{ul}} \quad \Longrightarrow \quad A_I = A_{I_2} \cdot A_{I_1}$$

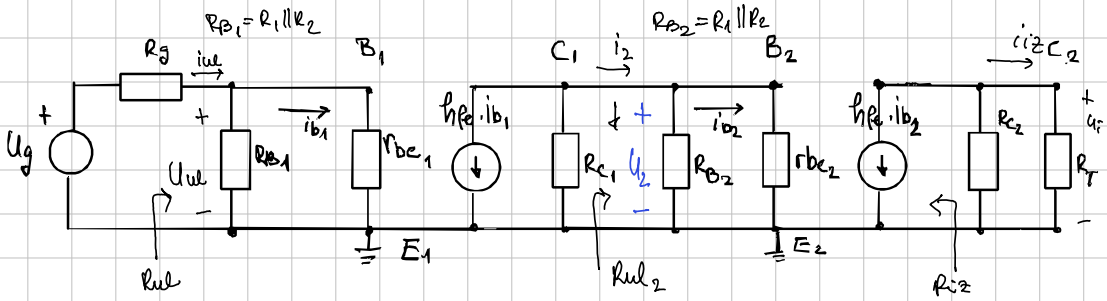

$$A_{V_2} = \frac{U_{iz}}{U_2} \quad ; \quad U_{iz} = -h_{fe} \cdot i_{b_2} (R_{c_2} \| R_T) \qquad U_2 = i_{b_2} \cdot r_{be_2}$$

$$A_{V_2} = \frac{U_{iz}}{i_{b_2}} \cdot \frac{i_{b_2}}{U_2} = -h_{fe} (R_{c_2} \| R_T) \cdot \frac{1}{r_{be_2}} \rightarrow A_{V_2} = -h_{fe} \frac{R_{c_2} \| R_T}{r_{be_2}}$$

$$* \; A_{V_2} = -g_m (R_{c_2} \| R_T)$$

$$A_{I_2} = \frac{i_{iz}}{i_2} \quad ; \quad i_{iz} = \frac{R_{c_2}}{R_{c_2} + R_T} \cdot (-h_{fe} \cdot i_{b_2})$$

$$i_{b_2} = i_2 \cdot \frac{R_{B_2}}{R_{B_2} + r_{be_2}} \rightarrow i_2 = i_{b_2} \cdot \frac{R_{B_2} + r_{be_2}}{R_{B_2}}$$

$$A_{I_2} = \frac{i_{iz}}{i_2} = \frac{i_{iz}}{i_{b_2}} \cdot \frac{i_{b_2}}{i_2} = -h_{fe} \cdot \frac{R_{c_2}}{R_{c_2} + R_T} \cdot \frac{R_{B_2}}{R_{B_2} + r_{be_2}} = A_{I_2}$$

$$R_{ul_2} = R_{B_2} \| r_{be_2}$$

$$A_{V_1} = \frac{U_2}{U_{ul}} \qquad U_2 = -h_{fe} \cdot i_{b_1} \cdot (R_{c_1} \| \overbrace{R_{B_2} \| r_{be_2}}^{R_{ul_2}}) \rightarrow A_{V_1} = \frac{U_2}{i_{b_1}} \cdot \frac{i_{b_1}}{U_{ul}}$$

$$U_{ul} = i_{b_1} \cdot r_{be_1}$$

$$A_{V_1} = -h_{fe} (R_{c_1} \| R_{B_2} \| r_{be_2}) \cdot \frac{1}{r_{be_1}} \rightarrow A_{V_1} = -h_{fe} \frac{(R_{c_1} \| R_{ul_2})}{r_{be_1}}$$

$$A_{I_1} = \frac{i_2}{i_{ul}} \qquad i_2 = -h_{fe} \cdot i_{b_1} \cdot \frac{R_{ul_2}}{R_{c_1} + R_{ul_2}} \qquad A_I = \frac{i_2}{i_{b_1}} \cdot \frac{i_{b_1}}{i_{ul}}$$

$$i_{b_1} = i_{ul} \cdot \frac{R_{B_1}}{R_{B_1} + r_{be_1}} \rightarrow i_{ul} = i_{b_1} \cdot \left(\frac{R_{B_1}}{R_{B_1} + r_{be_1}} \right)^{-1}$$

$$A_{I_1} = -h_{fe} \cdot \frac{R_{ul_2}}{R_{c_1} + R_{ul_2}} \cdot \frac{R_{B_1}}{R_{B_1} + r_{be_1}}$$

$$R_{ul} = R_{B_1} \| r_{be_1}$$

$$R_{iz} = R_{c_2}$$

Příklad 3.2) $A_V = \frac{u_{iz}}{u_{ul}}$; $A_I = \frac{i_{iz}}{i_{ul}}$, R_{ul}, R_{iz} =?

R_B

npn tranz → $h_{fe} = 100$ $\qquad U_T = 25mV$

$$\boxed{R_{ul} = R_{B1} \parallel r_{be1} = 2362.2}$$

$A_V = A_{V2} \cdot A_{V1}$ $\qquad A_I = A_{I2} \cdot A_{I1}$

$R_{iz} = R_{C2}$

$A_{V2} = -h_{fe} \cdot \frac{R_{C2} \parallel R_T}{r_{be2}}$ $\qquad r_{be} = \frac{U_T}{I_B}$ $\qquad r_{ce} = \frac{U_A}{I_C}$ $\qquad g_m = \frac{I_C}{U_T}$

$r_{be1} = 2500\,\Omega$ $\qquad r_{be2} = 1995.2\,\Omega$

$A_{V1} = -h_{fe} \cdot \frac{R_{C1} \parallel R_{ul2}}{r_{be1}}$

$A_{V2} = -125.3$

$R_{ul2} = R_{B2} \parallel r_{be2}$

$A_{V1} = -60.8$

$R_{ul2} = 1878.1$

$\Downarrow$

$$\boxed{A_V = 7618.24}$$

$$\boxed{R_{iz} = R_{C2}}$$

$A_{I2} = -h_{fe} \cdot \frac{R_{C2}}{R_{C2} + R_T} \cdot \frac{R_{B2}}{R_{B2} + r_{be2}} = \dots = -47.1$

$A_{I1} = -h_{fe} \cdot \frac{R_{C1} \parallel R_{ul2}}{r_{be1}} = \dots = -60.8$

$$\boxed{A_I = 2863.68}$$